KELTIC SERIES
7080 Hinged Door (Swing Out)

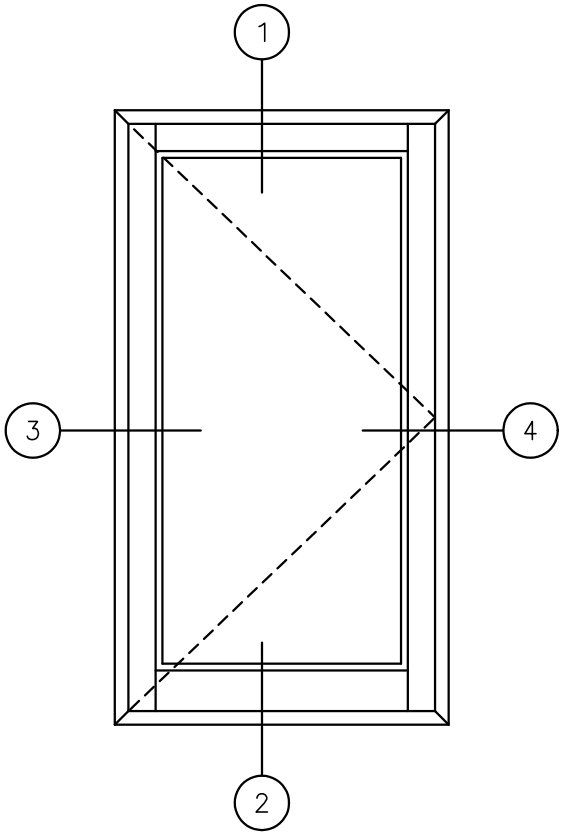

AR - AL OPPOSITE

General Notes:
Not to Scale
Due to continual product development, detail and technical data are subject to change without notice
For latest product specifications please go to our website: www.intlwindow.com or contact your IWC Representative
This is an architectural view of cross sections only and installation of shims, fasteners and sealant shall be the responsibility of the installer

IWC

SERIES 7080SR
HEAD DETAIL 1

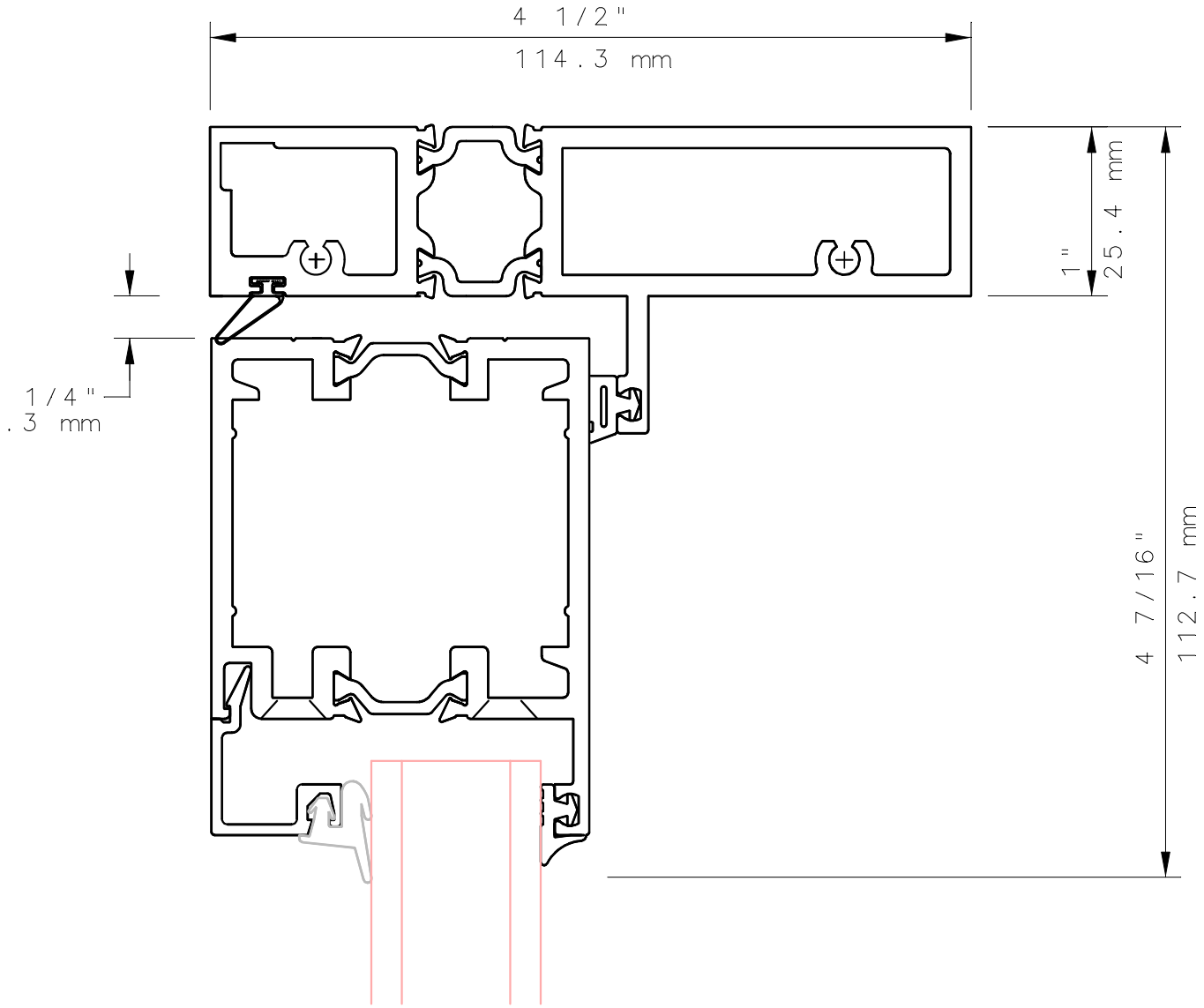

NOTE:

THIS IS AN ARCHITECTURAL VIEW OF CROSS SECTIONS ONLY AND INSTALLATION OF SHIMS, FASTENERS, AND SEALANT SHALL BE THE RESPONSIBILITY OF THE INSTALLER.

INTERNATIONAL WINDOW - NORTHERN CAL.
1320 PERFORMANCE DR.
STOCKTON, CALIFORNIA 95206
Ph: (209) 323-6850 FAX: (510) 471-9387

INTERNATIONAL WINDOW CORPORATION
2455 WARDLOW RD.
CORONA, CALIFORNIA 92878
(800) 477-4032
FAX # (562) 928-3492

SERIES 7080SR
SILL DETAIL 2

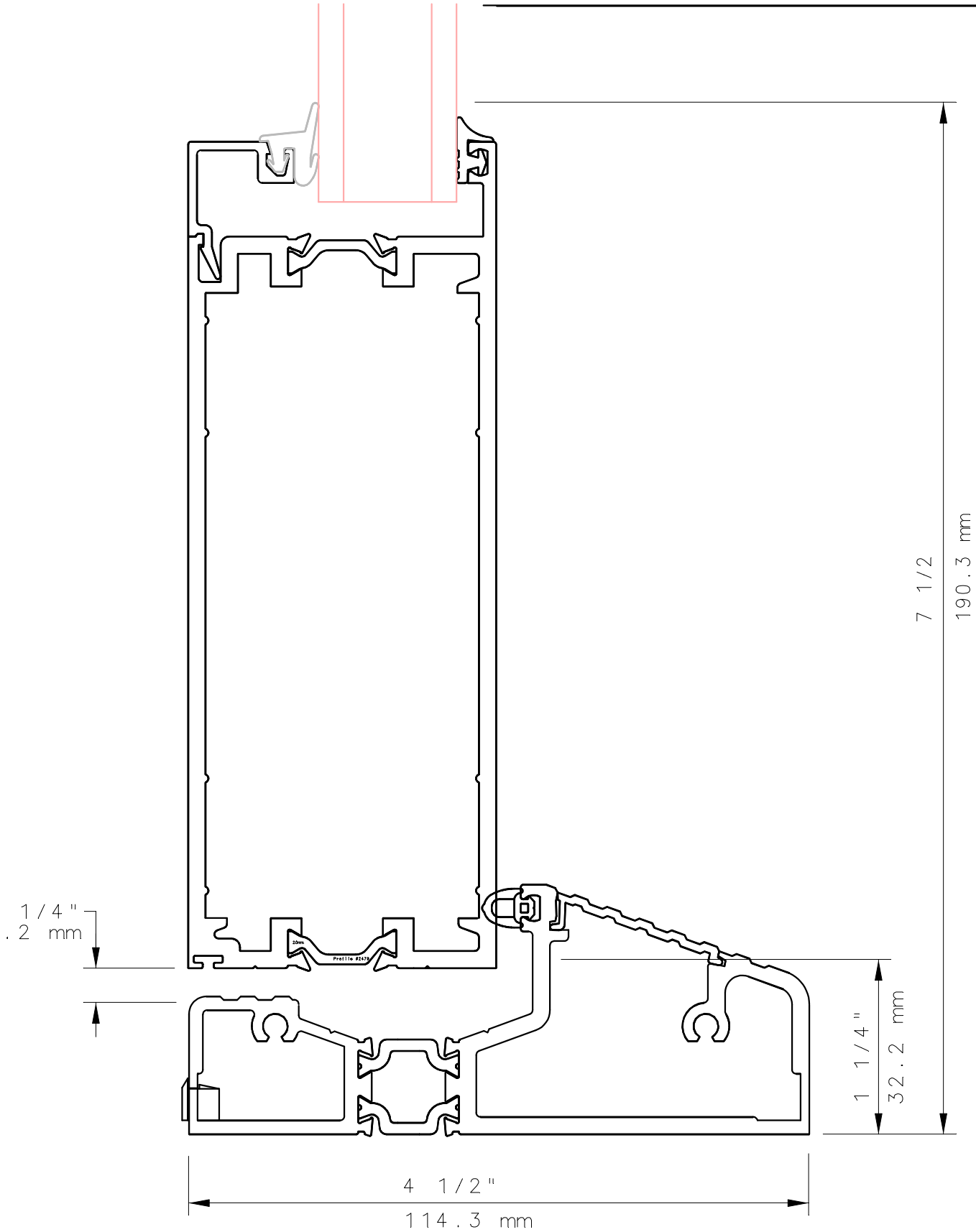

INTERNATIONAL WINDOW
1320 PERFORMANCE DR.
STOCKTON, CALIFORNIA 95206
Ph: (209) 323-6850 FAX: (510) 471-9387

INTERNATIONAL WINDOW
2455 WARDLOW RD.
CORONA, CALIFORNIA 92878
(800) 477-4032
FAX # (562) 928-3492

SERIES 7080SR
LOCK JAMB DETAIL 3

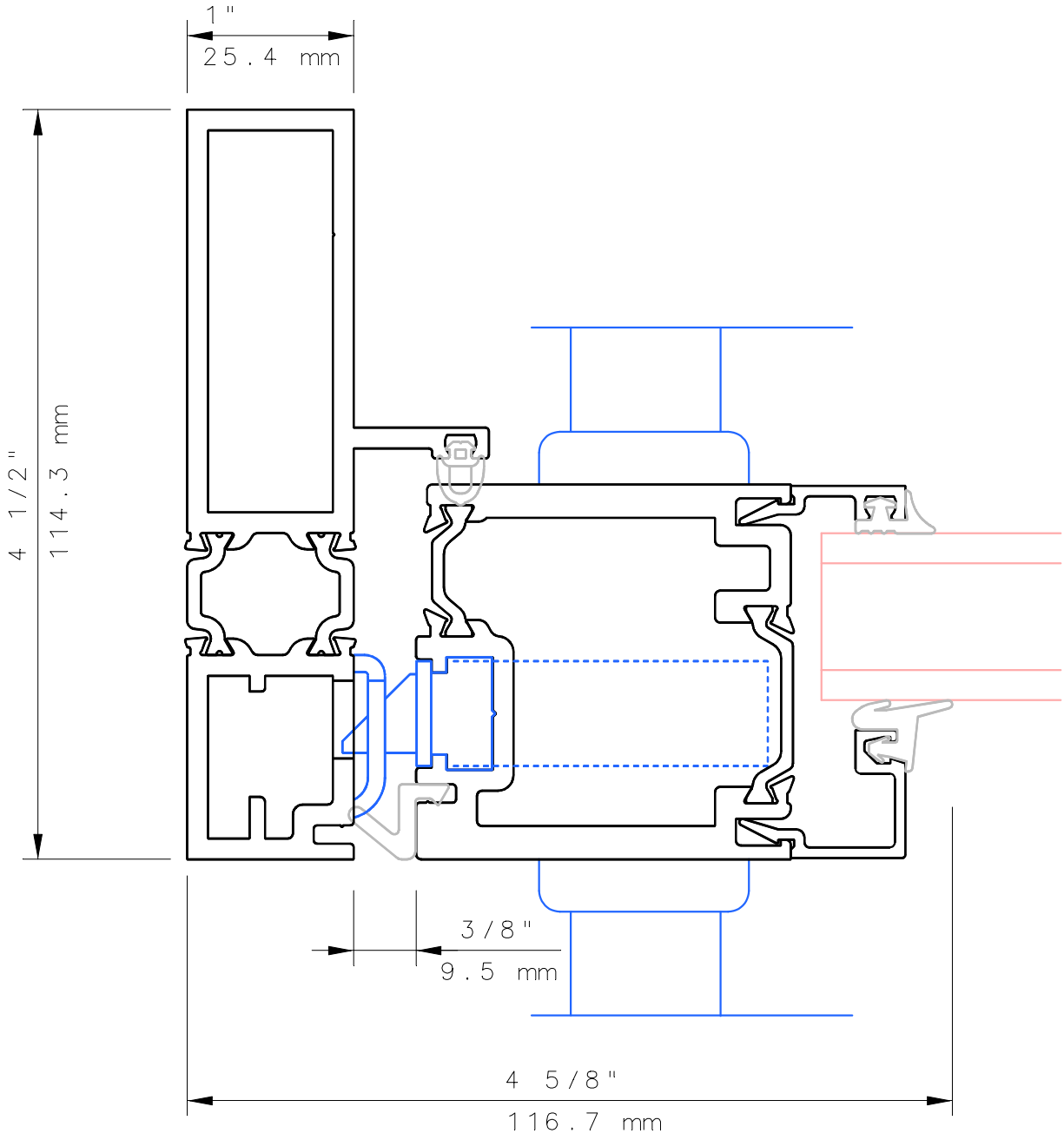

THIS IS AN ARCHITECTURAL VIEW OF CROSS SECTIONS ONLY AND INSTALLATION OF SHIMS, FASTENERS, AND SEALANT SHALL BE THE RESPONSIBILITY OF THE INSTALLER.

INTERNATIONAL WINDOW NORCAL
1320 PERFORMANCE DR.
STOCKTON, CALIFORNIA 95206
Ph: (209) 323-6850 FAX: (510) 471-9387

INTERNATIONAL WINDOW SOCAL
2455 WARDLOW RD.
CORONA, CALIFORNIA 92878
(800) 477-4032 FAX # (562) 928-3492

IWC

SERIES 7080SR
HINGE JAMB DETAIL 4

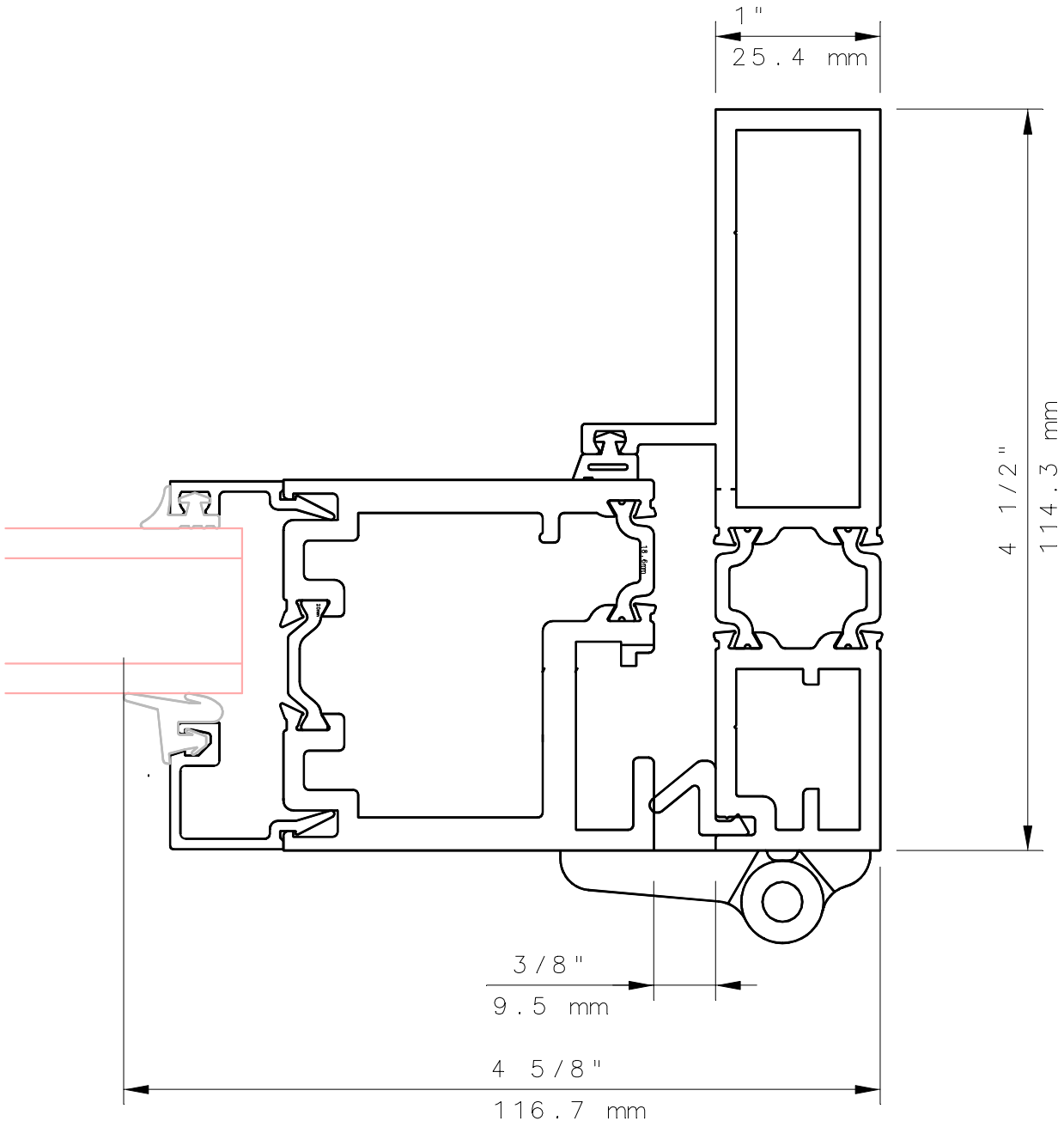

NOTE:

THIS IS AN ARCHITECTURAL VIEW OF CROSS SECTIONS ONLY AND INSTALLATION OF SHIMS, FASTENERS, AND SEALANT SHALL BE THE RESPONSIBILITY OF THE INSTALLER.

INTERNATIONAL WINDOW - NORTHERN CAL.
1320 PERFORMANCE DR.
STOCKTON, CALIFORNIA 95206
Ph: (209) 323-6850 FAX: (510) 471-9387

INTERNATIONAL WINDOW CORPORATION
2455 WARDLOW RD.
CORONA, CALIFORNIA 92878
(800) 477-4032
FAX # (562) 928-3492